OWNER'S MANUAL
PANTHERA MKII - DYNAMIC MKII AND MORE

FX PANTHERA MKII

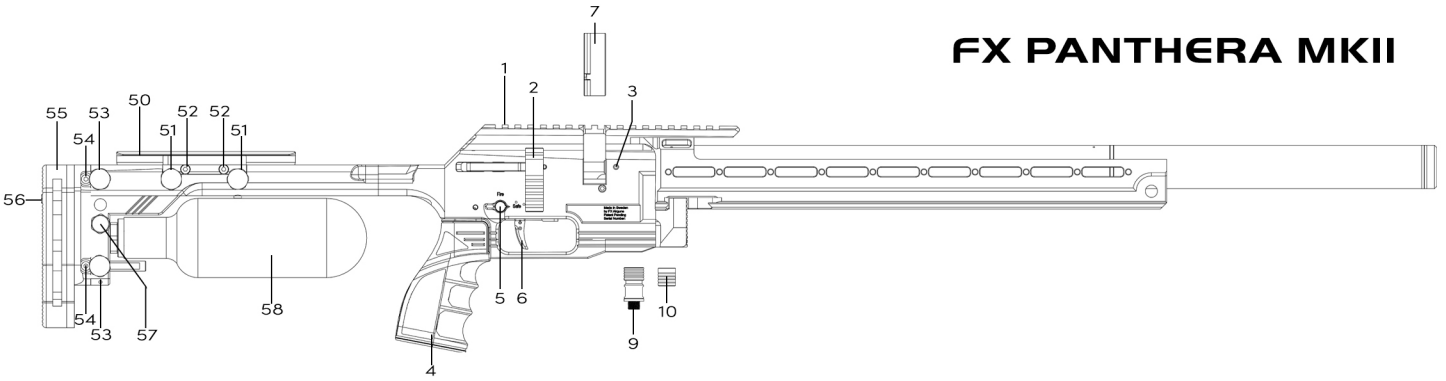

1 Picatinny Rail
2 Sidelever
3 Barrel Fastener
4 Grip
5 Safety
6 Trigger
7 Magazine
9 Quick Connector Female
10 Dust Cap

11 Barrel Fastener
13 Micro Power Adjuster
14 Macro Power Adjuster
15 Regulator Pressure
16 Main Pressure
17 Regulator
20 Protective Cover
31 Barricade stop
32 Fore-end Stock
35 Accessory Mount

50 Cheek Piece
51 Cheek Piece Locking
52 Ambidextrous Fastener
53 Length of Pull Locking
54 Angle Locking
55 Recoilpad
56 Recoilpad Locking
57 Quick Connector
51 Cheek Piece Locking
58 Air Bottle

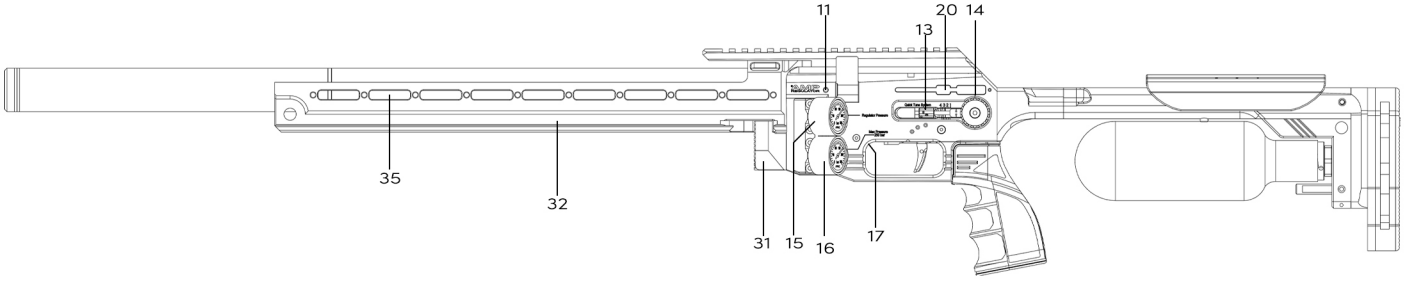

FX DYNAMIC MKII

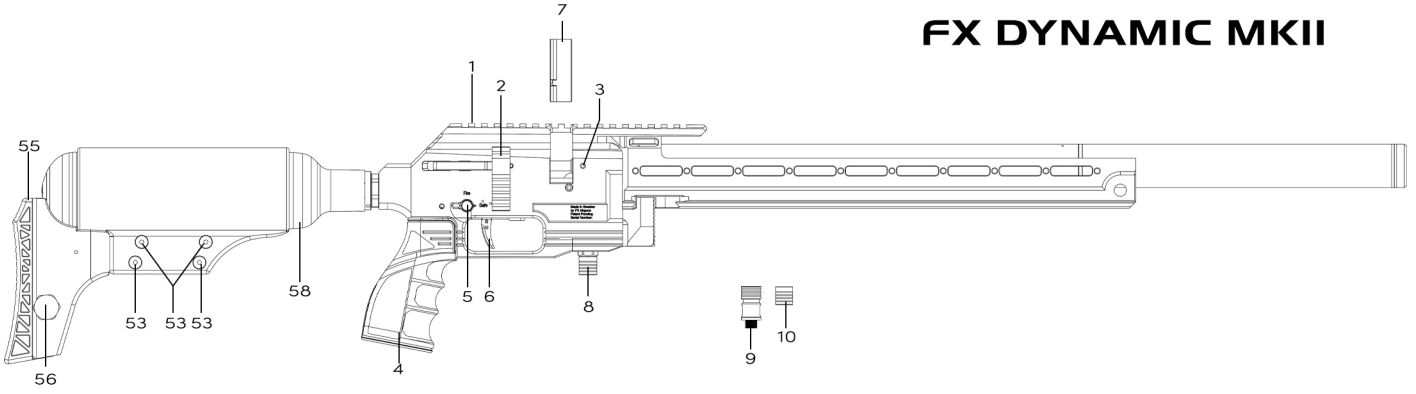

1 Picatinny Rail
2 Sidelever
3 Barrel Fastener
4 Grip
5 Safety
6 Trigger
7 Magazine
8 Quick Connector
9 Quick Connector Female
10 Dust Cap

11 Barrel Fastener
13 Micro Power Adjuster
14 Macro Power Adjuster
15 Regulator Pressure
16 Main Pressure
17 Regulator
20 Protective Cover
31 Barricade stop
32 Fore-end Stock
35 Accessory Mount

53 Length of Pull Locking
55 Recoilpad
56 Recoilpad Locking
58 Air Bottle

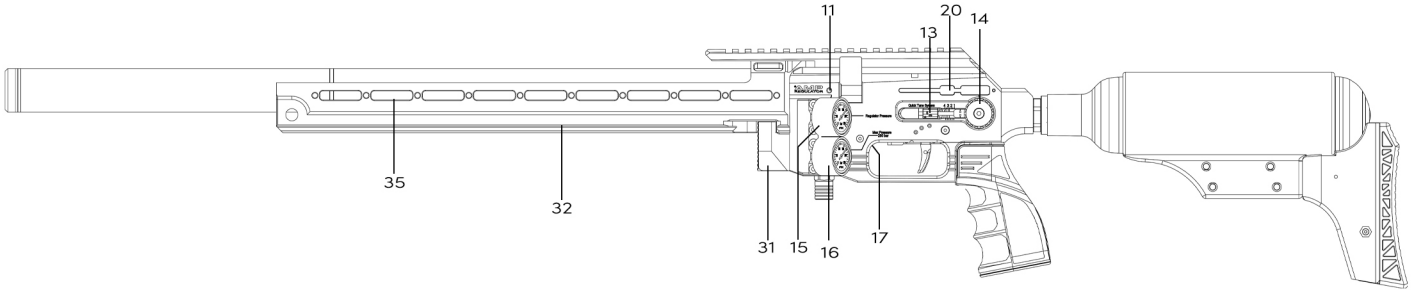

FX PANTHERA MKII
Hunter

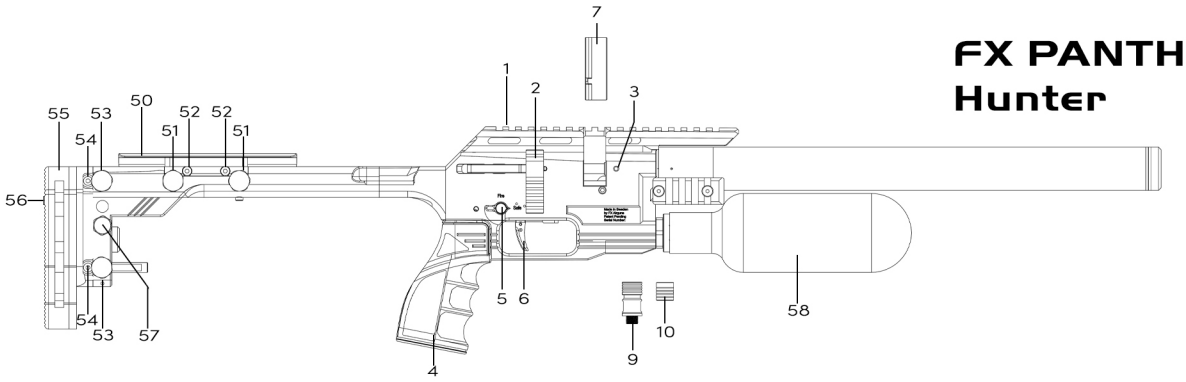

1 Picatinny Rail
2 Sidelever
3 Barrel Fastener
4 Grip
5 Safety
6 Trigger
7 Magazine
9 Quick Connector Female
10 Dust Cap

11 Barrel Fastener
13 Micro Power Adjuster
14 Macro Power Adjuster
15 Regulator Pressure
16 Main Pressure
17 Regulator
20 Protective Cover
31 Barricade stop
35 Accessory Mount

50 Cheek Piece
51 Cheek Piece Locking
52 Ambidextrous Fastener
53 Length of Pull Locking
54 Angle Locking
55 Recoilpad
56 Recoilpad Locking
57 Quick Connector
51 Cheek Piece Locking
58 Air Bottle

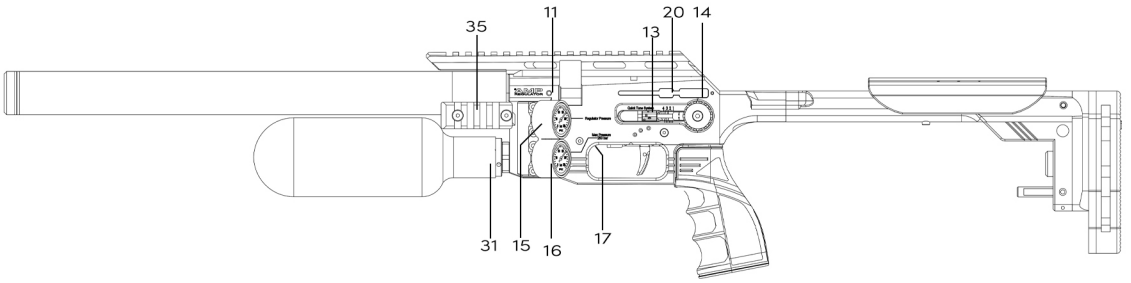

FX DYNAMIC MKII
Compact

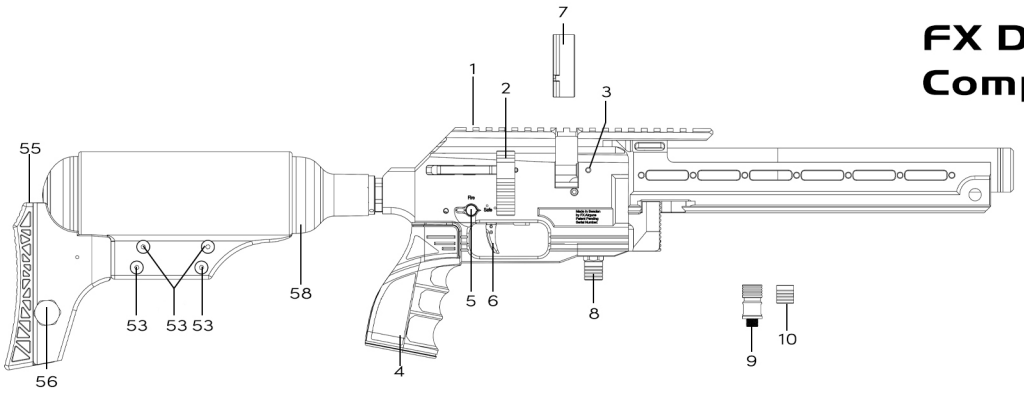

1 Picatinny Rail
2 Sidelever
3 Barrel Fastener
4 Grip
5 Safety
6 Trigger
7 Magazine
8 Quick Connector
9 Quick Connector Female
10 Dust Cap

11 Barrel Fastener
13 Micro Power Adjuster
14 Macro Power Adjuster
15 Regulator Pressure
16 Main Pressure
17 Regulator
20 Protective Cover
31 Barricade stop
32 Fore-end Stock
35 Accessory Mount

53 Length of Pull Locking
55 Recoilpad
56 Recoilpad Locking
58 Air Bottle

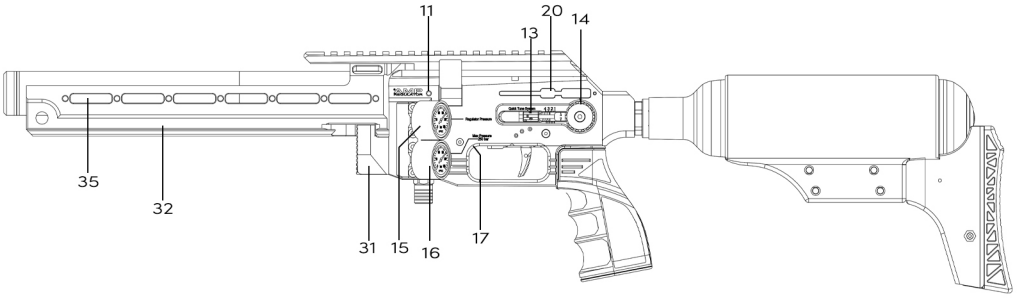

Welcome

Welcome to the FX family, and congratulations on your new FX precision air rifle! Please read and follow this manual thoroughly. This manual covers the main features and operation of the FX Panthera MKII and Dynamic MKII platforms.

		Page
1	**Warnings**	7
2	**Safety Operations**	7
3	**Handling (cocking and uncocking)**	8
4	**Gear up**	8
5	**Pressurize**	8
6	**Load your magazine**	13
7	**How to use**	14
8	**Regulator Adjustments**	18
9	**Trigger Adjustments**	20
10	**Configuration & Adjustments**	23
11	**Miscellaneous**	26

1 Warnings

- Never attempt to disassemble this rifle.
- Never fire the rifle when it is empty of air or when air cylinder is removed.
- Never point the rifle at anyone or allow anyone to point a rifle at you.
- Treat every rifle as if it is loaded even if you know it is not loaded.
- Always carry the rifle so that the direction of the muzzle is under control, even if you stumble.
- Always be sure of your target and what lies behind it before firing your rifle.
- Never leave a loaded rifle unattended.
- Beware of targets that tend to cause ricochets.
- It is recommended that eye protection is worn.
- Always use caution when operating this rifle.
- Learn and obey the laws in your location.
- Be responsible in your use of this rifle.
- Never fill the rifle with anything else other than regular air.
- Never ever fire the rifle below set regulator pressure.
- If equipped with a carbon-fiber air tank: inspect according to the instructions on the tank.
- Never leave the rifle with ammunition in the bore/barrel.
- Do not attempt to remove or disassemble the barrel system (separate manual).
- Barrel runs thru a pressurized tube and faulty dismantling can cause serious damage.
- Failure to obey these instructions could result in personal injury or damage to the gun!

2 Safety Operations

This gun uses a switch style safety that is very easy to operate (5)

Safe: Not possible to fire the gun.
Fire: You are able to fire the gun. Keep the gun in safe mode when you do not intend to fire.

Note: Never point the rifle at anyone even if it is set to “safe”.

3 Handling

3.1 Cocking the rifle

Prepare the rifle for use by learning how to operate the sidelever cocking system.

Set the safety (5) to the “Safe” position and pull the sidelever (2) rearwards, this engages the trigger and hammer simultaneously.

A distinct click at the rearward position confirms that the rifle is cocked.

Move the sidelever forward and make sure it is completely closed, your gun is ready to be fired if safety is set to “Fire”.

It is preferable to store the gun un-cocked, so next step is to learn how to un-cock.

3.2 Uncocking the rifle/inactivate trigger system

Pull the cocking lever (2) to its rear position, put the safety (5) to Fire.

Hold one hand on the cocking lever and then with the other hand you squeeze the trigger (6) and simultaneously gently move the cocking lever forward.

This will release the trigger and hammer-spring tension.

For Left hand shooters:

This base is equipped with an ambidextrous sidelever mount, see section 10.3.

It comes mounted for right hand use but can easily be relocated to the left side for left hand shooters.

4 Gear Up

4.1 Optics Mount (1)

This one-piece front rail with integrated scope rail is equipped with a picatinny style rail with built in angle 9 MIL / 30 MOA

Mount your optics according to the optics manual but wait with zeroing until you have come to point 7.3. Zeroing.

4.2 Fore-end Stock (32)

Panthera MKII and Dynamic MKII models feature an ARCA-Swiss fore-end with M-LOK accessory interfaces. The side of the rail gives possibilities to mount picatinny rails via the M-lok system. Accessories like NV bridge or control bridge are available as OEM items.

This will get you ready for most of the accessories on the market.

5 Pressurize

5.1 Preparation

One 1/8” threaded quick connector (9) is supplied with the rifle, this can be attached to the most common charging sources on the market.

NOTICE – Make sure that the thread is 1/8” at the charging source before you attach the connector.

Attach the connector to the source and make sure it seals.

One seal is included and attached to the connector and is sufficient in most cases. Make sure to follow manual for the connected charging source.

There might be multiple points on the rifle that has thread for quick connector so you might notice that one of the points is sealed, depending on model the quick connector is situated in an area where it’s evaluated to be the best point for the purpose of the gun.

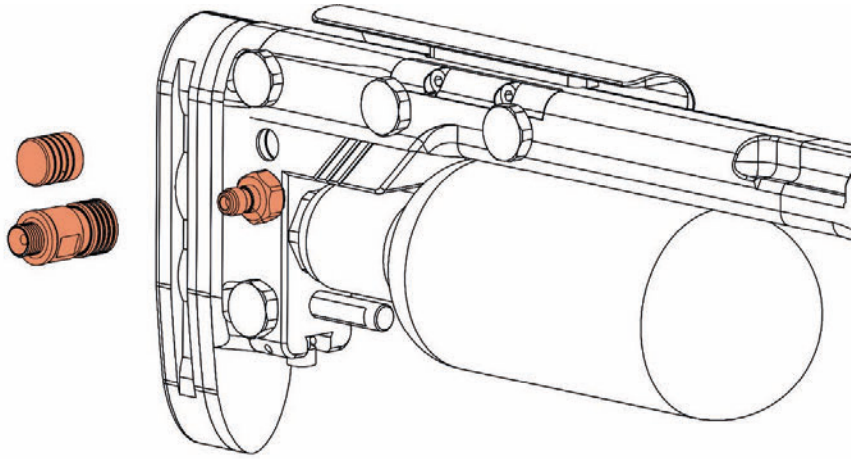

ELEMENT
FX
AMP

5.2 Pressurize

Max overall pressure in system: 250 BAR

Max air reservoir pressure: See markings on air reservoir.

Remove dust-cap (10) Close ventilation screw on the charging source.

Push the quick connector over the male connector on the gun (8)
(also accessible in the rear of the Panthera model) (57).

Charge the rifle to wanted pressure without exceeding maximum pressure limit of air reservoir or main block.

You read the charging pressure of the main pressure gauge (16)

Also check the pressure on the charging source, they have in some case a more reliable gauge.

The gauges on the gun are indicators and might not be 100% accurate.

When you are ready with the fill you drain/bleed hose pressure on the charging source and simply release the quick connector by pulling the sleeve.

Put the dust cover back in place and you are ready.

Recharge as soon as you come to the point when tank pressure (16) is just above regulator

Output pressure (regulated) (15) Never use the gun if tank pressure is below set regulator pressure.

If the gun is completely empty when you start filling you might experience difficulties to get the gun to hold the air, you might notice it by air escaping thru the barrel.

This can be prevented by opening the sidelever/cocking the gun. This releases the pressure from the Hammer/hammer-spring on to the valve. As soon as the system takes on air you can uncock the rifle as explained in section 3.2.

WARNING – Only dry air should be used! Under no circumstances should Oxygen or any other gas be used to fill the air-tubes! This might result in serious injury or death!

6 Magazine

How to load the Side-Shot magazine (7)

Turn the lid-lock (1) to the position (open) where you can remove the lid (2). Turn the pellet tray (3) counterclockwise until you hit the stop.

Put a pellet into the first position (4) head first while holding your finger under the hole to stop it, let go of the pellet tray as the pellet you inserted will lock and prevent the pellet tray from rotating.

Insert the rest of the pellets head first, make certain all the pellets fall in correctly into their slots (5).

Once the magazine has been filled, put the lid back into position and turn the lid-lock until it is the opposite position of the cutout (locked).

Our guns are tested and tuned in the factory for best possible performance and accuracy.

1

2

3

4

5

7 How to use

7.1 Inserting magazine

Set the safety (5) to “Safe” position.

Prepare the rifle for use by pulling rearward on the cocking lever (2) until it clicks in the rearward position.

The barrel breech has a protruding edge which matches the slot in the magazine (7). Carefully insert the magazine in the magazine slot.

Press firmly to ensure the magazine is completely installed.

Closing the cocking lever will now load a pellet into the barrel and make the rifle cocked and ready for use.

Make sure that side lever is completely closed in the front position, failure to do so might result in damaged cocking mechanism. This kind of abuse is not covered by warranty. Be sure to keep the rifle pointed in a safe direction throughout this entire procedure.

NOTE – Each cocking enters a pellet into the barrel, if not fired for each repetition you will end up with more than one pellet/slug in the barrel. If this happens you will need help from a gun smith.

Do not remove ammunition in the barrel without proper know-how as you might damage barrel.

If you want to end your shooting session with half used magazine It’s preferred that you fire the current round in your chamber and then remove the magazine to make sure you do not store the gun with ammunition in the barrel.

7.2 Removal of Magazine

Put the safety (5) in “Safe” position and then pull the cocking lever (2) rearwards.

Pull the magazine out of the slot. Un-cock the rifle before putting it to side or leave it with open sidelever.

7.3 Zeroing the scope

When you feel you have a grip of the overall function you can move on to dial in your scope with support from the scope manual.

7.4 Power Settings / Quick Tune System

The power setting for this gun is from the factory set to perform at its best but to get the best out of the specific ammunition you intend to use you might want to fine tune the setting of the gun.

Before you make any adjustments , it is important that you write down the current setting so you always can go back to the factory settings.

Notes for your own settings

Make note of the factory setting before you start tuning the rifle.

	Factory settings			
Regulator pressure				
Micro Adjuster				
Macro Adjuster				
Ammunition				
Chronograph				
Comments				

There is no magic formula on how to tune but there are some basic guidelines:

Higher power does not mean better accuracy.

Too much hammer spring tension combined with low regulator pressure might result in high air consumption.

Setting the power can be done in 3 ways, two of them are easily adjusted without tools while shooting. These two will be explained in this section. Third adjuster (regulator pressure) requires tools and will be explained in section 8.1.

Why would I want to alter current power settings?

- Lower power to achieve less penetration.
- Increase power for higher penetration or longer distance.
- Lower power to get less air consumption when shooting short distance.
- Fine tune for better accuracy (sweet spot).
- Change of ammunition.

7.5 Macro Power Adjuster (14) – Hammer-spring tension adjuster

The Macro Power Adjuster (spring tension hammer wheel) is a quick way to tune the power and accuracy of your rifle and has 23 fixed levels.

NOTE – The rifle must be un-cocked when you turn the power adjuster. 1 is on the low side and 23 is on the high side of spring tension.

There is a circle around 13 on the scale of the Macro Adjuster. We recommended to use this as starting points for re-tuning after changing ammunition or regulator pressure.

High spring tension gives more power but uses more air.

NOTE – for best results the hammer tension needs to work in harmony and balance with the appropriate regulator pressure as described further in section 8.1

WARNING – NEVER adjust the power when rifle is cocked. Doing so might damage the Macro Power Adjuster and will void your warranty!

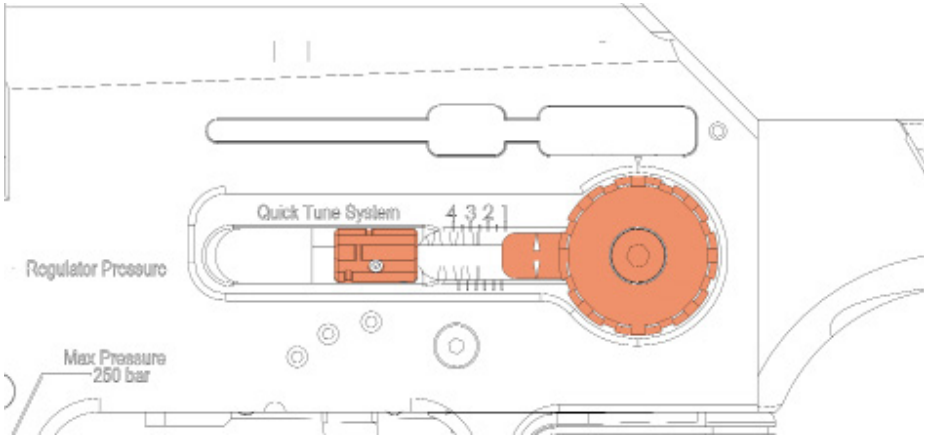

7.6 Micro Power Adjuster (13) – Fine Tune Barrel Roller

The Macro Power Adjuster (or hammer-spring tension adjuster wheel) is supported by the Micro Power Adjuster. This barrel roller on the side of the rifle gives you the possibility to fine tune with precision. It is easy to operate by rolling the wheel with your thumb and has marked grooves and digits to help you navigate.

Towards 4 is increasing power and towards 1 is decreasing power.

NOTE – At the lowest setting 1 on the Macro Power Adjuster you will not be able to set the Micro Power Adjuster all the way to 4 (max)

At the highest setting of 23 on the Macro Power Adjuster you will not be able to set the Micro Power Adjuster all the way to 1 (min).

7.7 barricade stop (31)

The Panthera and Dynamic is equipped with a barricade stop (31) providing the shooter with solid grip when shooting from a barricade or other unconventional shooting positions.

7.8 Pressure tank (58)

The Panthera and Dynamic is equipped with a detachable pressure tank with its own valve so it is safe to unscrew it from the system. It will still hold air but when you unscrew it there will be a minor escape of air before valve closes and this is perfectly normal. The regulator will hold air even if you unscrew the bottle.

8 Regulator adjustments

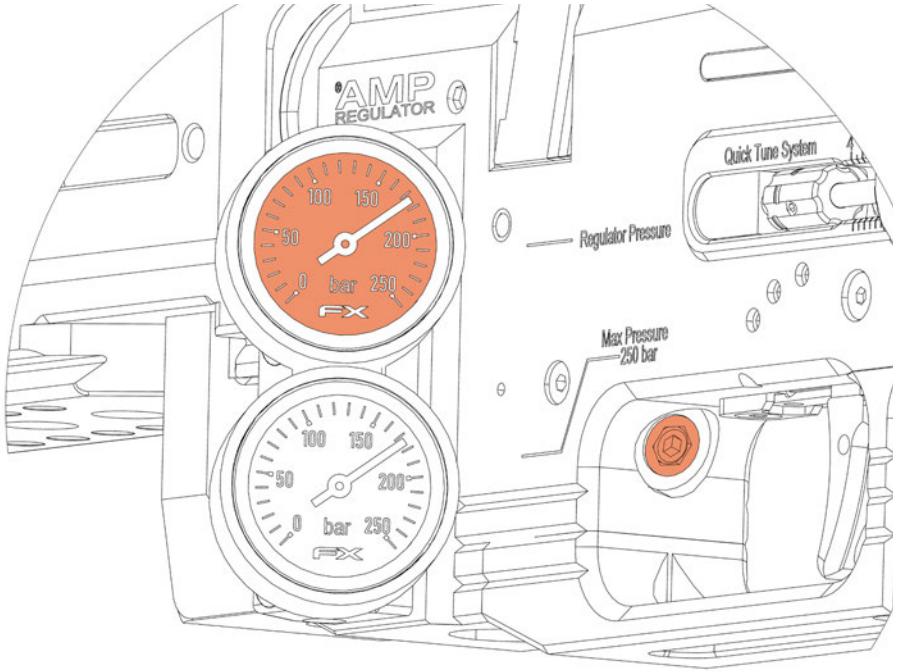

8.1 Externally Adjustable AMP Regulator

The regulator (17) reduces the pressure and sets the output / working pressure for the rifle.

Tools required

2,5 mm hex key with ball end.

Normally you will want the regulator set at the lowest possible pressure for the velocity you aim for.

To increase regulator pressure

Make sure you have more pressure in the tank than intended regulator pressure before starting this adjustment.

Gently adjust the regulator (17) counterclockwise a quarter of a turn and check the pressure on gauge (15) Repeat until the wanted pressure has been reached.

To decrease regulator pressure

Make sure there is no ammunition in the bore before making any adjustments.

Gently adjust the regulator (17) clockwise a quarter of a turn, dry-fire one shot in a safe direction, then check the regulator pressure. Repeat as necessary.

NOTICE – Make sure your rifle does not have ammunition in the bore/barrel before dry firing

NOTICE – NEVER adjust the regulator above 180bar as damage to the system may occur and will void your warranty!

WARNING – NEVER use the gun below the set regulator pressure as damage to the system may occur and will void your warranty!

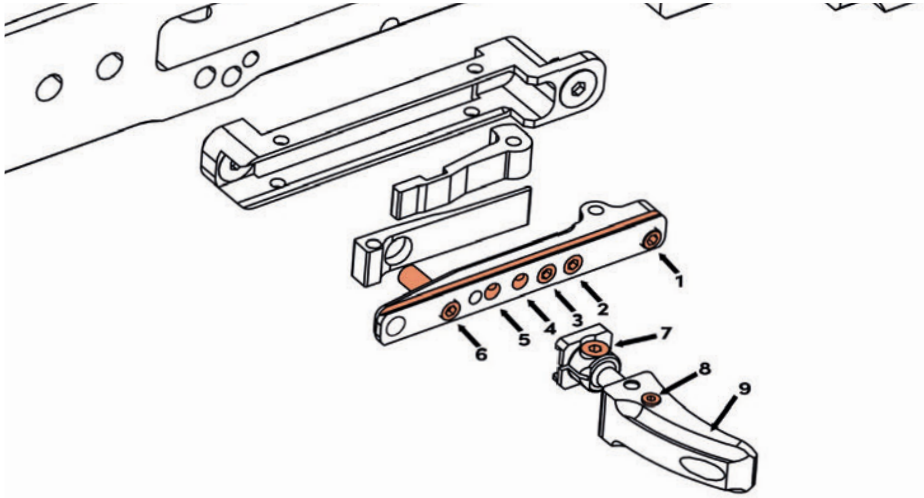

9 Trigger

The quick set trigger can be set in various ways to fit your needs.

1 1 st Stage / Slack / Travel.
2 2 nd stage / Break point position/angle.
3 2 nd stage / Break point resistance – Soft (match).
4 2 nd stage / Break point resistance – Medium.
5 2 nd stage / Break point resistance – Hunter.
6 Safety.
7 Trigger reach locking screw.
8 Trigger blade locking screw.
9 Trigger blade

Adjustment that does not affect safety

Trigger blade (9) can be adjusted in reach, height and even set in an angle.
Height and angle: loosen screw (8), tighten when in position.
Reach (trigger to grip distance): loosen screw (7), tighten when in position.

Adjustments that affect safety (caution!)

Following instruction only gives the essentials of the trigger, there are numerous ways you can set this trigger system which we can't cover here. Instruction videos will be available in our website.

Factory setting of the trigger (variations may occur)

1 Break point position (2) adjusted so trigger base is approximately zero degrees at break point.
2 1st stage/slack/travel (1) adjusted to a safe play (zero slack equals unsafe)
3 Break point resistance Soft – Activated Medium (4) and Hard (5) released.
4 Safety (6) – Must be controlled after any adjustments made to the trigger system. See instructions further down the page.
5 Break point resistance Medium (4) – Inactivated. If you want it activated point 3 and 5 must be released.
6 Break point resistance Hunter (5) – Inactivated. If you want it activates point 3 and 4 must be released.

Break point resistance

Consists of three adjustment screws but only one should be activated.

So, if you are to change you should release tension on the active one and apply tension to the one you choose. When you notice that the trigger engages by your adjustment its good to know if you continue the adjustment, you will not make it stiffer, but you will override the originally set break point (2) position and for each adjustment you make you move the break point.

Break point position/angle

If trigger will not engage you might need to adjust counterclockwise.

1 Setting the safety

- Before adjusting the safety, ensure you understand how to uncock the rifle and that the trigger is set to your preferred settings. See page 7, section 3.2 for detailed instructions.

2 Safety Precautions

- Always point your rifle in a safe direction during this procedure.
- Treat the rifle as if it were loaded.
- Ensure no magazine is inserted in the rifle and that there is no ammunition in the bore.

3 Adjusting the Safety Screw (6)

- Once you're familiar with the trigger settings, adjust the safety screw (6) by turning it clockwise as far in as possible while still allowing the rifle to fire cleanly without jamming. Be cautious not to adjust the screw too far in, as this could cause a misfire. Adjust only with small tweaks at a time.

4 Safety check

- Put the safety to safe position, cock the rifle without magazine or pellets in the chamber and point it in a safe direction.
- Put more pressure to the trigger than you would in a normal shot, the trigger should not go off in a situation like this.

Note *Do not use excessive force as this might bend the trigger or cause other malfunctions.*

- If the trigger goes off in this test you need to readjust the safety. Following these steps will help you safely and effectively set the safety on your rifle.
- If your trigger looks slightly different then the one explained in this manual, visit the support page on our website for correct instructions.

WARNING *– Adjustment to the trigger might cause safety malfunction. Adjustments might void your warranty if done improperly.*

Adjustments to one screw may impact the function or other aspects of the trigger-function.

Proper tuning requires the know-how of what one adjustment does in relation to another and should be performed by a trained specialist.
Never rely on the trigger or safety when pointing your rifle at any target.

To ensure safety and reliability make sure you test thoroughly before you use the rifle.

10 Configuration & Adjustments

10.1 Rail removal

The rail and scope rail can be easily removed by removing the barricade stop (3 screws) followed by the 2 screws underneath the rail and the 4 screws on top of the scope rail.

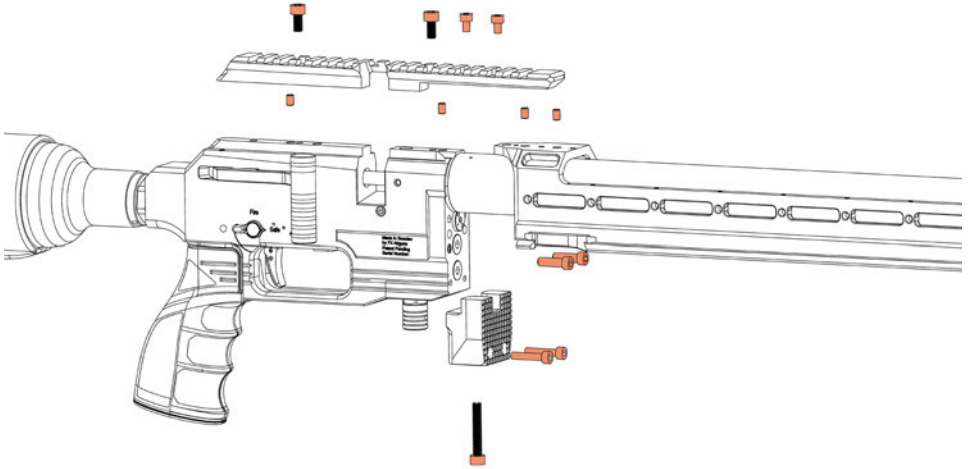

10.2 AR 15 Grip

Grip can easily be replaced with any AR15 aftermarket grips.
It's easily replaced by removing the screw inside the grip using a 5 mm hex key through the bottom of the grip.

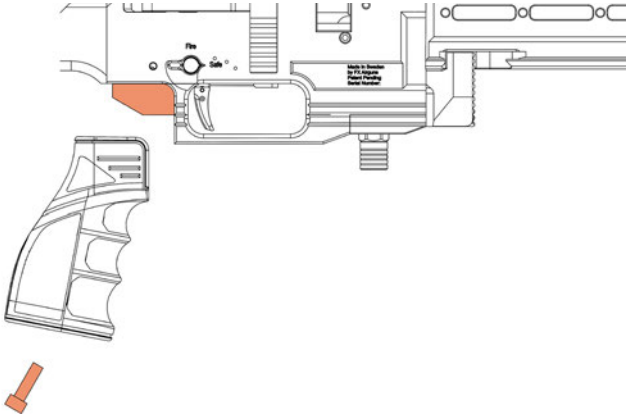

10.3 Sidelever

This base is equipped with an ambidextrous sidelever mount.

It comes mounted on the right side but can easily be relocated to the left side (20) for left hand shooters.

Remove locking screw A and there after screw B and C, release the sidelever assembly. Screw C is located underneath the scope rail. See instructions to remove it in section 10.1.

Remove locking screw D and remove sidelever handle.

Remove locking screw E and F to be able to release the protective cover (20).

Relocate parts to the opposite side.

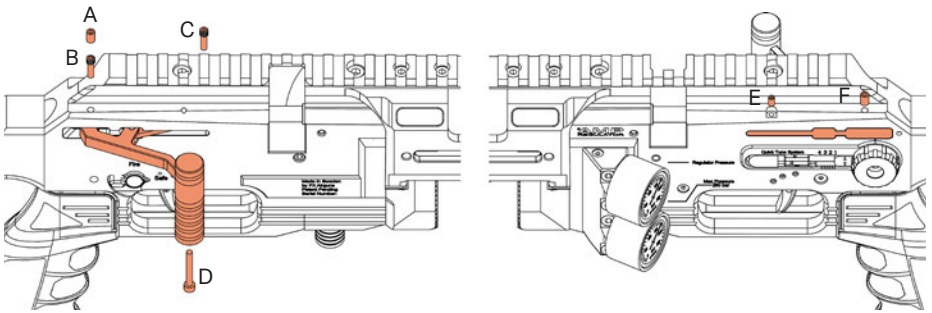

10.4 Ambidextrous Cheek Piece (Panthera) (50)

Cheekpiece can easily be relocated to the right hand of the gun. Remove adjuster knobs (51) and then remove locking screws (52) Relocate on the right side and reattach the screws and adjuster knobs

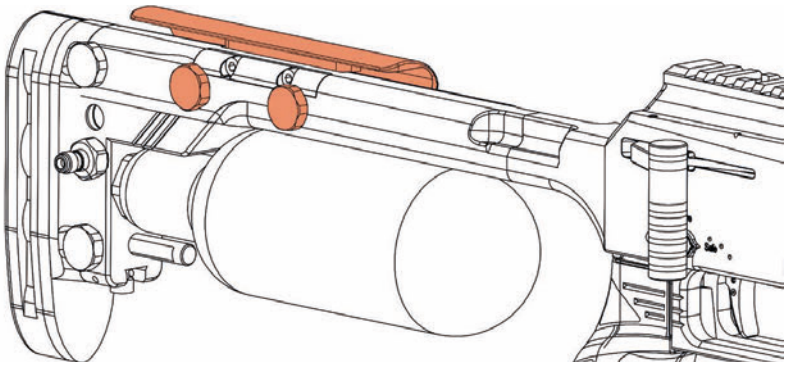

10.5 Recoil pad (55)

Panthera recoil pad: Adjustable in Height, angle, and length of pull.

Dynamic recoil pad: Adjustable in Height and length of pull.

Height: Loosen screw (56) to adjust.

Angle: Loosen screws (54) along with knobs (53) to adjust. Length of pull: Loosen knobs (53) to adjust

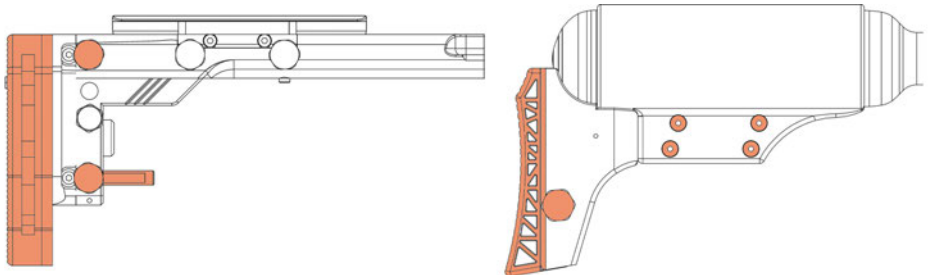

11 Miscellaneous

11.1 Warranty

All FX Airguns carry a Three-Year Warranty against faulty workmanship and defective materials. If it becomes necessary, first contact the dealer from which you purchased the gun. If the rifle is determined to have a defect within the warranty period, contact the warranty center to arrange service. The warranty guarantee does not cover any damage caused by tampering with the rifle or abuse. This rifle should only be disassembled by factory-authorized repairmen.

11.2 Maintenance

Keep the rifle clean.

Metal parts will benefit from occasional oil treatment preventing them from corrosion. We recommend the use of cleaning pellets occasionally or if there is a sudden change in accuracy.

WARNING –Only use cleaning and lubricants intended for gun use.

11.3 Storage

Store dry and dark if possible.

Preferable stored pressurized in between just above regulator pressure to max pressure.

WARNING – High humidity might cause corrosion if gun is not treated correctly.

Never store the gun in sunlight as this might damage O-rings and anodizing.

Never store the rifle with loaded magazine.

Keep out of reach from children or unauthorized persons.

14.09.26

AMP
ELEMENT
FXairguns
MADE IN SWEDEN
FXairguns
www.fxairguns.com